Politecnico di Torino

Dams & Reservoirs DAY 2025

Water and Energy security for Europe

OPEN DAY ON DAMS



Dams and environment: engineering solutions for the future

TORINO , 28 maggio 2025

Numerical modelling in dam engineering: from simple to advanced methods

antonella.frigerio@rse-web.it

ITCOLD – II Concorso Fotografico

Focus of the presentation

Understand how numerical modelling can support engineers in assessing the safety of diversion works

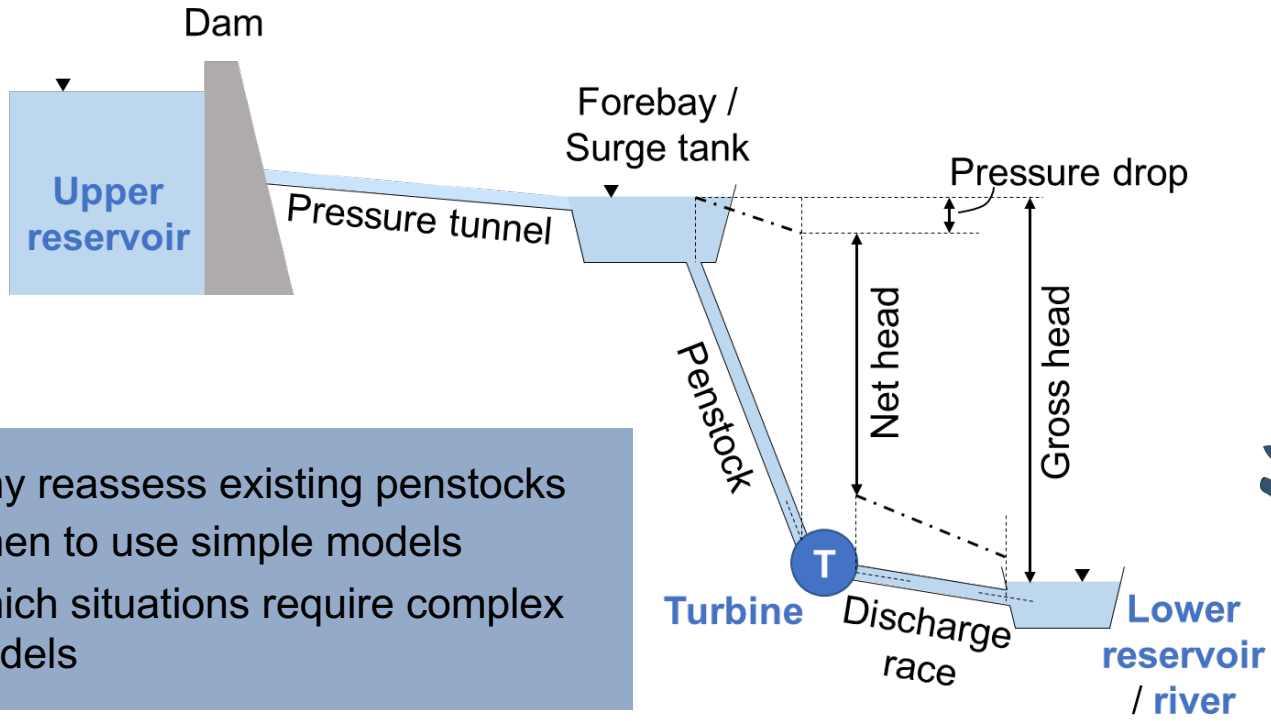

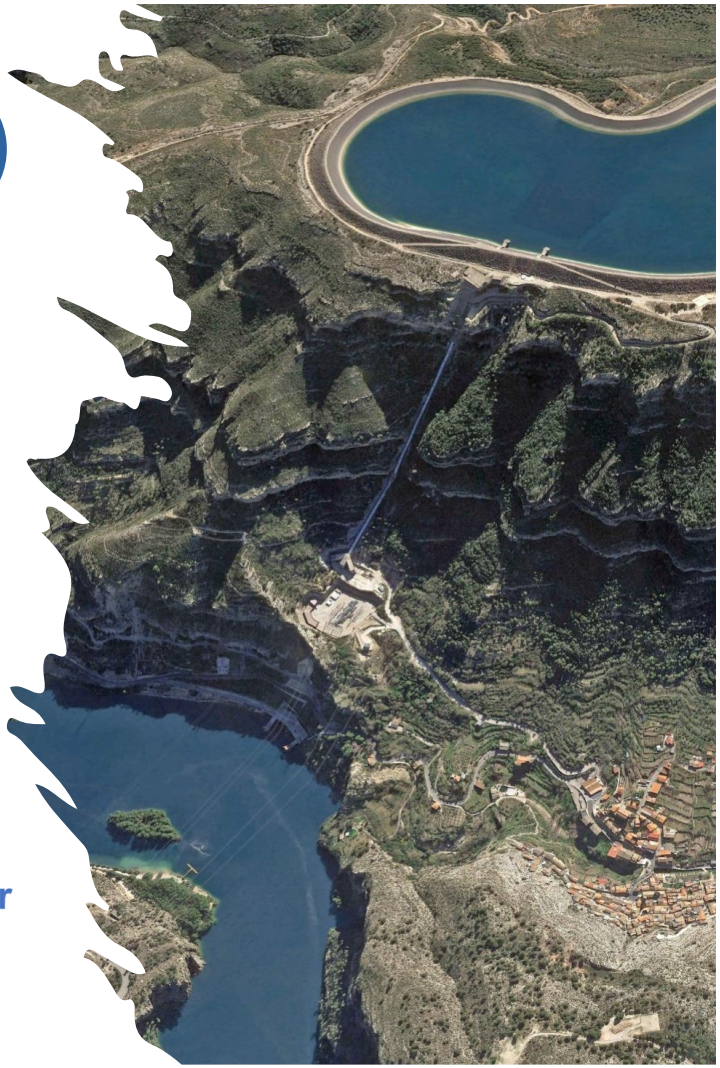

1. Why reassess existing penstocks
2. When to use simple models
3. Which situations require complex models

Why reassess the safety of existing penstocks?

Material aging

Reduction of thickness beyond the design limit, occurrence of diffused or localized corrosion phenomena, manufacturing defects…

Measurement Anomalies

The emergence of permanent displacements, significant strain-stress conditions, heightened shear slip, and the development of cracks...

Geological phenomena

Presence of deep-seated gravitational slope deformations, high risk of landslides, misalignments due to the movements of supports…

Exceptional events

Impacts, water hammering, malfunctioning during operation…

Requirements set by authorities

For example, as a result of the revisions in seismic and hydrologic hazard assessments, the issuing of local or national regulations or newly established standards…



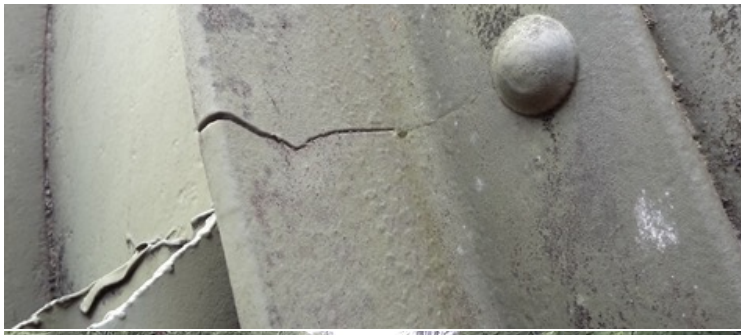



Why reassess the safety of existing penstocks?



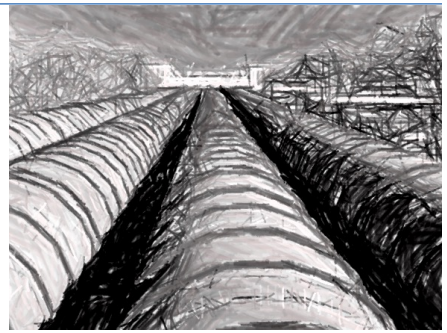

In many European countries there is a **lack of standards** for the design of new penstocks and even **regulations** for institutional controls

Operators have overseen the inspection and maintenance of penstocks so far using **long-established internal procedures**

In 2016 the Autonomous Province of Bolzano issued the **Province Decree No. 313**, which introduced measures aimed at improving safety for plants that need a concession to use public waters for electricity generation

In 2024, the **Ministerial Decree No. 94** has established for the first time a control discipline for diversion works


AUTONOME PROVINZ BOZEN - SÜDTIROL
PROVINCIA AUTONOMA DI BOLZANO - ALTO ADIGE
Beschluss der Landesregierung
Deliberazione della Giunta Provinciale
SERIE GENERALE
GAZZETTA UFFICIALE
DELLA REPUBBLICA ITALIANA
AVVISO ALLE AMMINISTRAZIONI
SOMMARIO

Safety assessment of existing penstocks

Asseveration process

- Topographic analysis
- Geologic - geomechanics analysis
- Material investigation and testing
- Hydraulic transient analyses

Evaluation of both Operating and Collapse Limit States for diversion works, taking into account static and seismic loads

- Assessment of the safety devices
- Risk assessment related to anthropic aspects

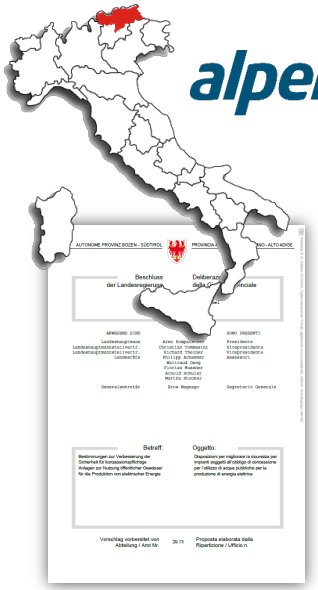

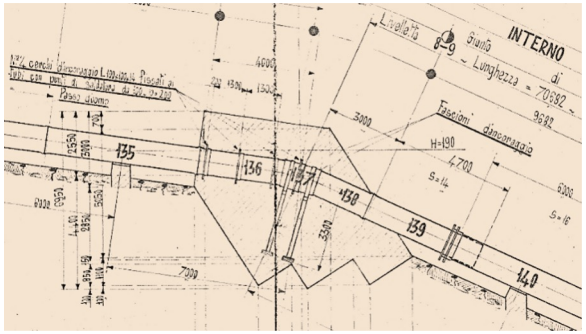

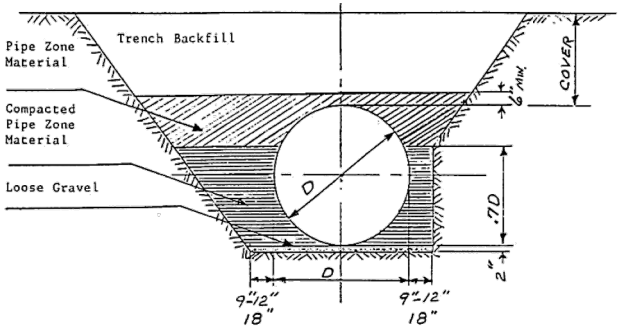

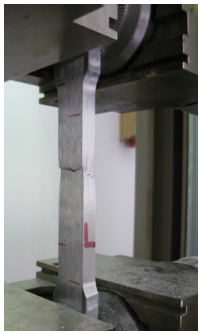

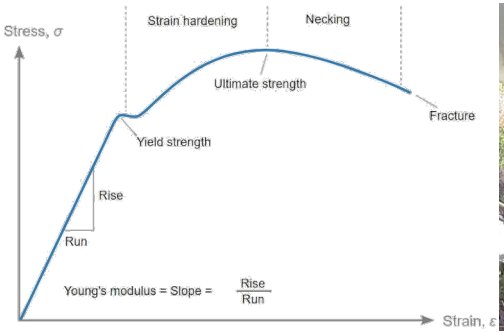



Safety assessment of existing penstocks



Past

Collect **data** regarding the **structural design** (including technical drawings, design calculations, material properties, geological information, etc.) and the **historical operating conditions** (noting any changes in loading or boundary conditions, test results, monitoring information, and both scheduled and unscheduled repairs, etc.).

Present

Evaluate the current safety condition of the structure.

Future

Assess potential rehabilitation strategies to ensure or enhance the structural safety over the medium to long term.

Safety assessment of existing penstocks



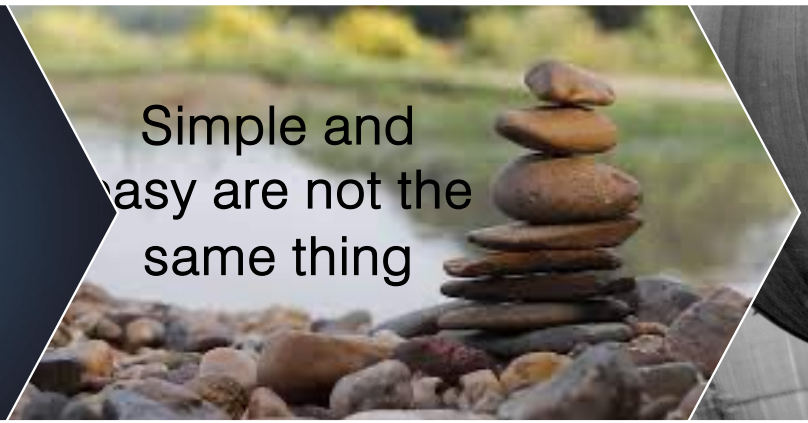

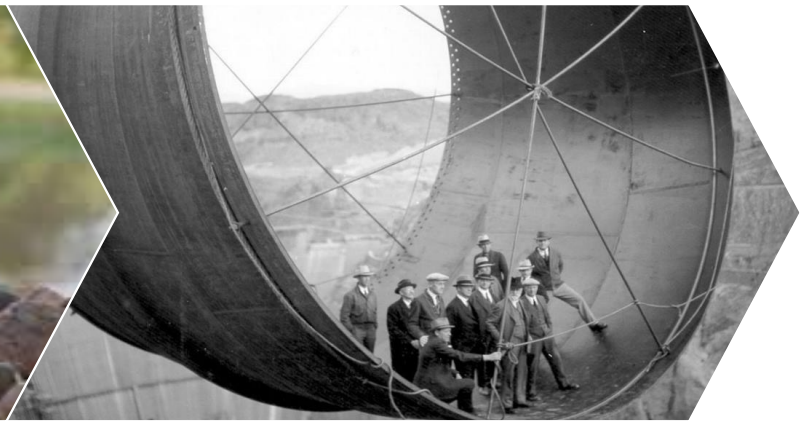

It is advisable to assess the structural behavior using **basic conceptual models** that rely on analytical formulas or closed-form solutions

Basic schemes can often rely on too **conservative assumptions**, which may not accurately represent the actual behavior of the structures

The **verification of collapse limit states** for **aging structures** built to dated standards may be **critical** or even not meet the required criteria

When should numerical modelling be employed for safety evaluations?



From analytical formula or closed-form solutions...

... to complex and advanced finite element models

If the safety assessment based on simple schemes does not meet the required criteria, conservative or unrealistic assumptions must be gradually removed

Numerical modelling, based on the Finite Element Method, can represent more accurately the geometry and the real operating conditions of existing structures

WARNING
the most advanced numerical methods can be used only if the quality of available data allow the set up and validation of the numerical model

How can numerical modelling support engineers?



Assess which physical phenomena are in progress and how their evolution can affect the structural behavior



Assess the impact of historical events or changes in operational conditions on the structure's present behavior



Select the rehabilitation works that ensure the long-term safety and operational functionality of the structure

Which data are necessary to set up finite element models?



- ✓ Design technical drawing and calculations
- ✓ Current status of the alignments, topographic mapping
- ✓ Geological site investigation (photogeological maps, lithology, seismicity, ground water conditions…)
- ✓ In situ inspections based on non-destructive testing techniques and/or laboratory testing on materials
- ✓ Hydraulic studies related to operational and accidental loading conditions (malfunctioning of safety devices, exceptional vibration, water hammering…)
- ✓ Data related to specific events occurred during the operational life (repair interventions, replacing or reinforcement of components...)
- ✓ Data provided by visual inspections, control and monitoring systems

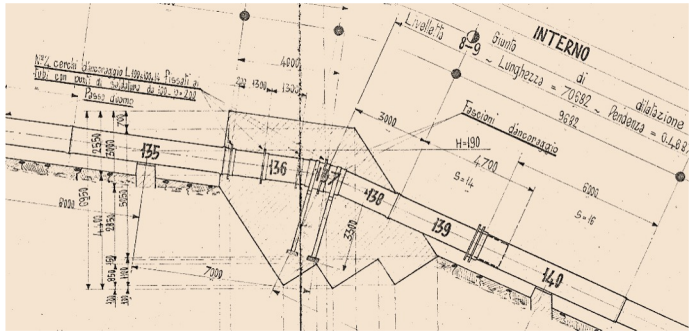



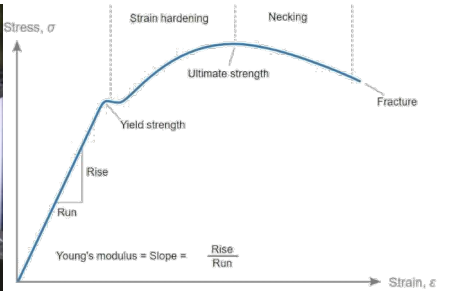



Numerical modelling: verification and validation



Verification

The implemented **numerical methods and algorithms** must properly approximate the **mathematical solution** of the investigated physical phenomena

Validation

The **numerical model** must be representative of the **real physical behavior** of the structure under examination; i.e., numerical results should best match the measured data

Basic numerical models can aid in assessing stress levels and eliminate overly cautious assumptions.





Open air steel penstocks: analytical formulation

Thin-walled penstock

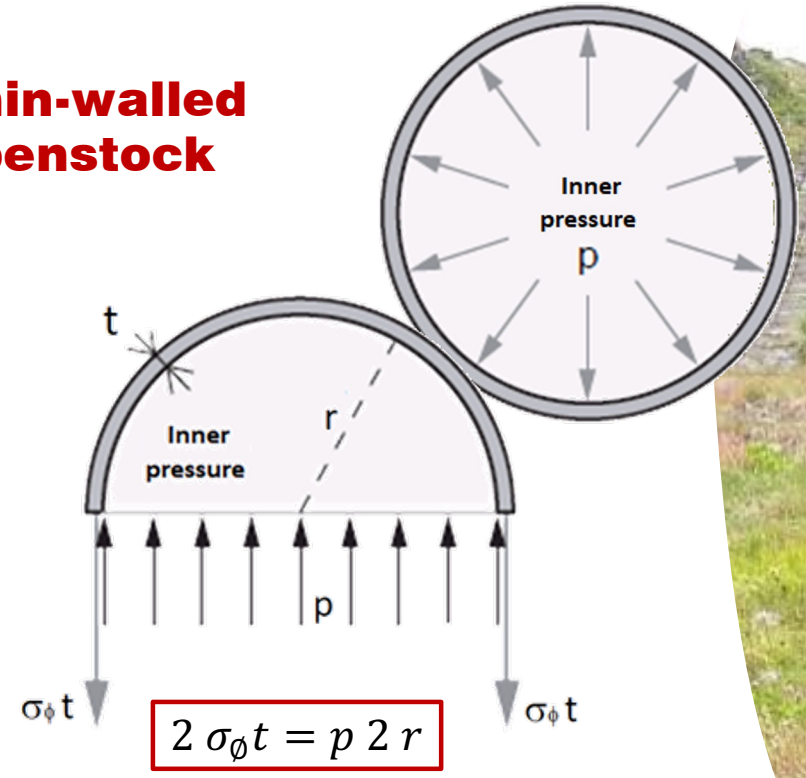

$$2\,\sigma_\emptyset t = p\,2\,r$$

Hoop stress σ_ϕ

Barlow/Mariotte's formula



Open air steel penstocks: 1D beam scheme



Longitudinal stress σ_x

Continuous beam with an expansion joint and fixed ends

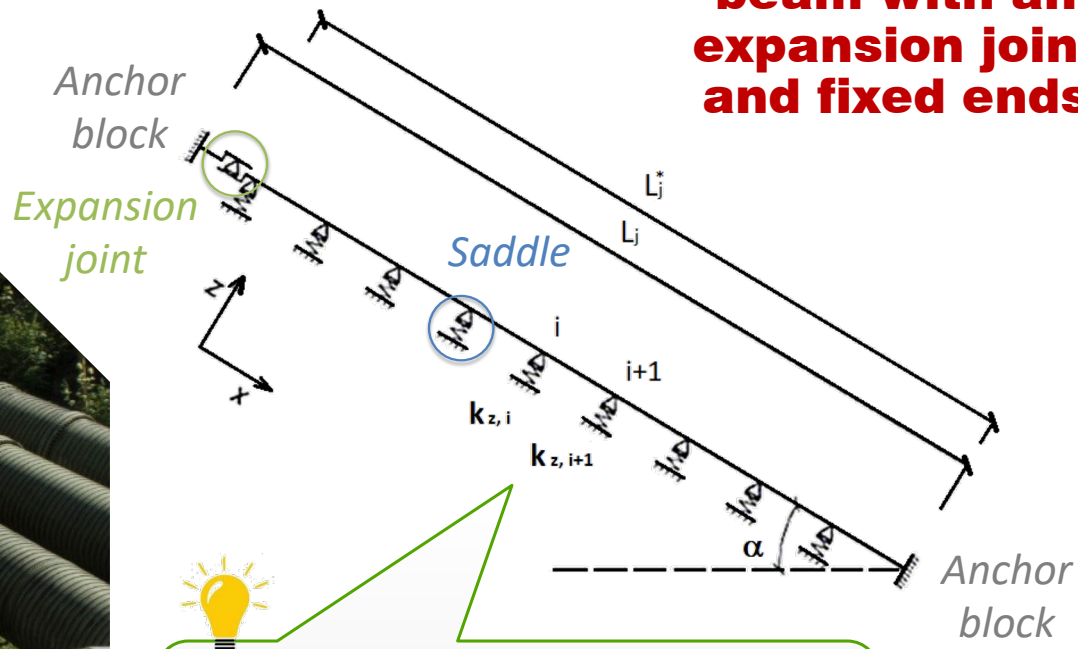

1D beam elements can be used to easily compute longitudinal stresses

Open air steel penstocks: combined stresses evaluation

Combined stresses

Von Mises criteria

$$\sigma_{von\ Mises} = \sqrt{\sigma_{\phi}^2 + \sigma_x^2 - \sigma_{\phi}\sigma_x} \leq \frac{f_{yk}}{\gamma_{M0}}$$

What about local stresses close to saddles?

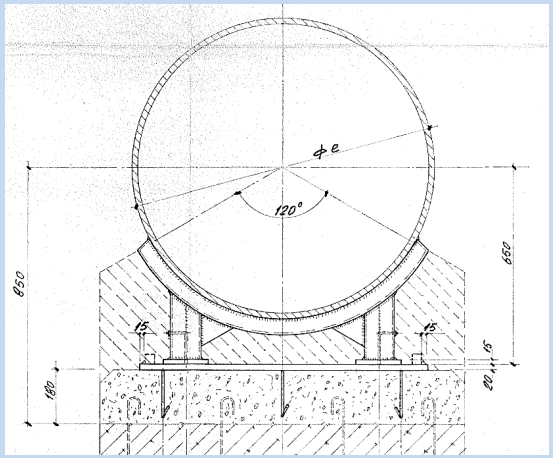

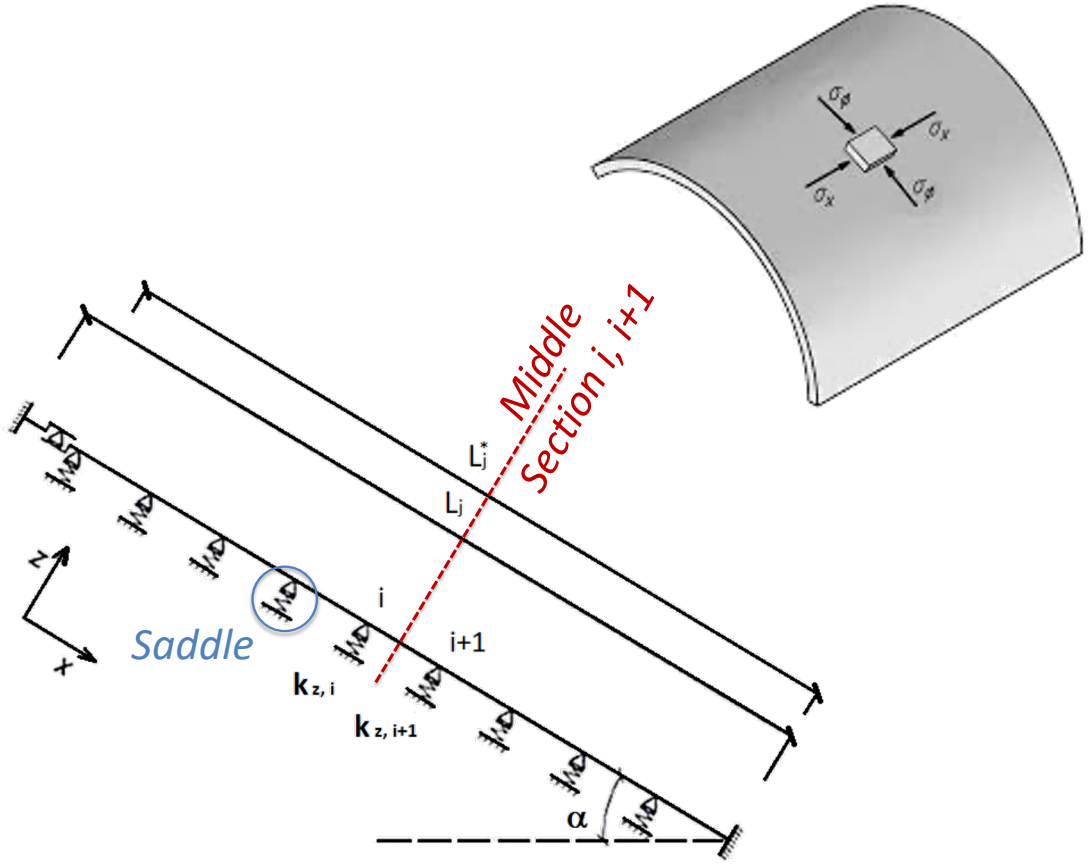

Open air steel penstocks: local stresses evaluation

Semi-empirical approaches

Hoop stress σ_ϕ

Roarck's formula

$$\sigma_{max} = k\frac{Q}{t^2}ln\left(\frac{r}{t}\right)$$

Q = *total saddle reaction*

$k = 0.02 - 0.00012\ (\theta - 90)$, r/t > 50

$k = 0.03 - 0.00017\ (\theta - 90)$, 28 < r/t < 50

The maximum circumferential stress is located at 15° from the saddle tip

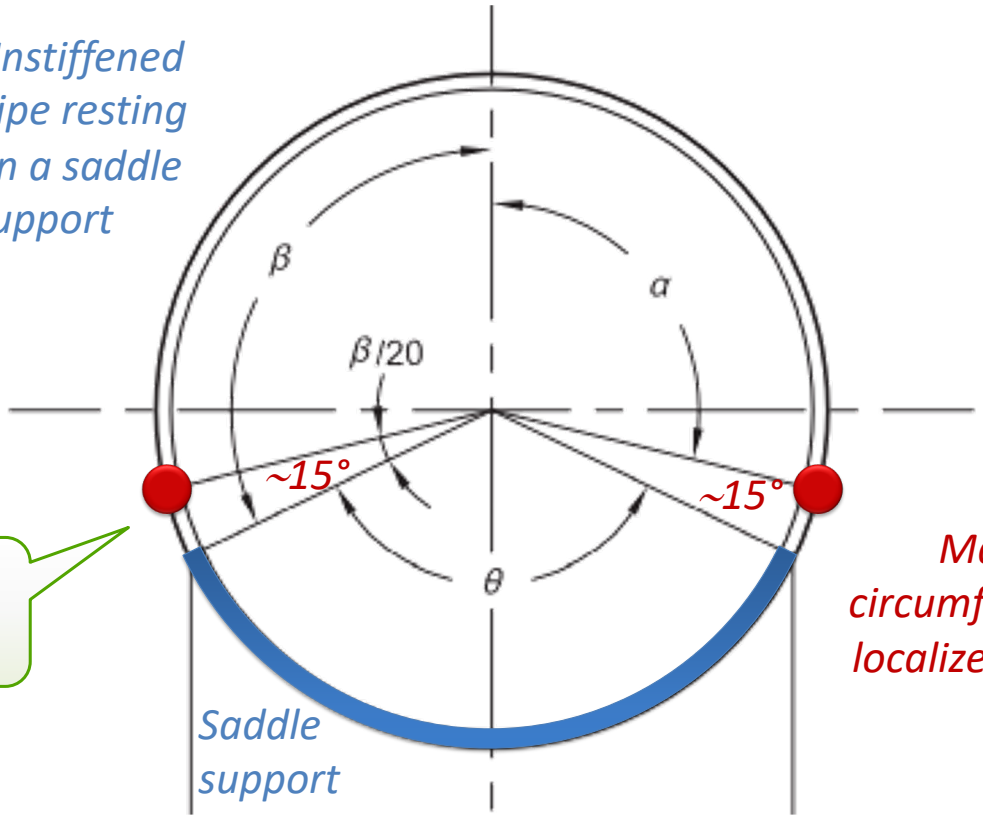

Open air steel penstocks: local stresses evaluation

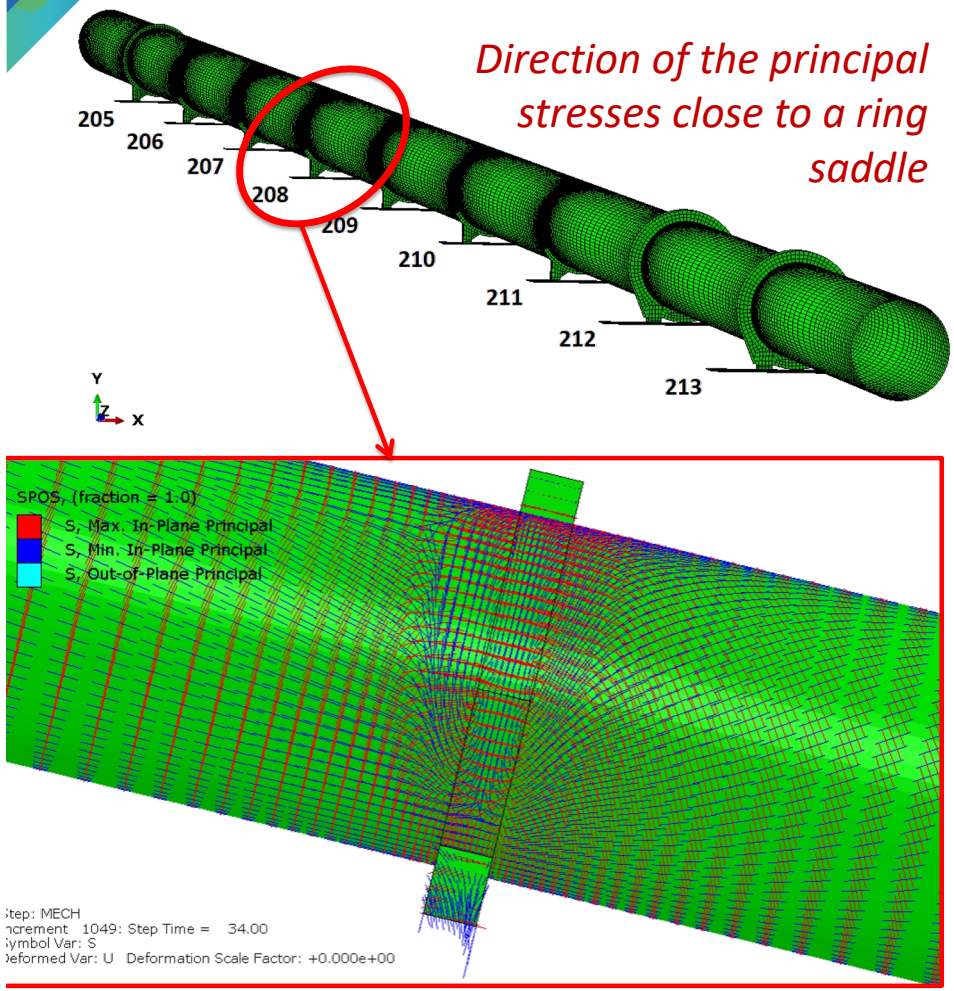

Direction of the principal stresses close to a ring saddle

3D numerical Finite Element model

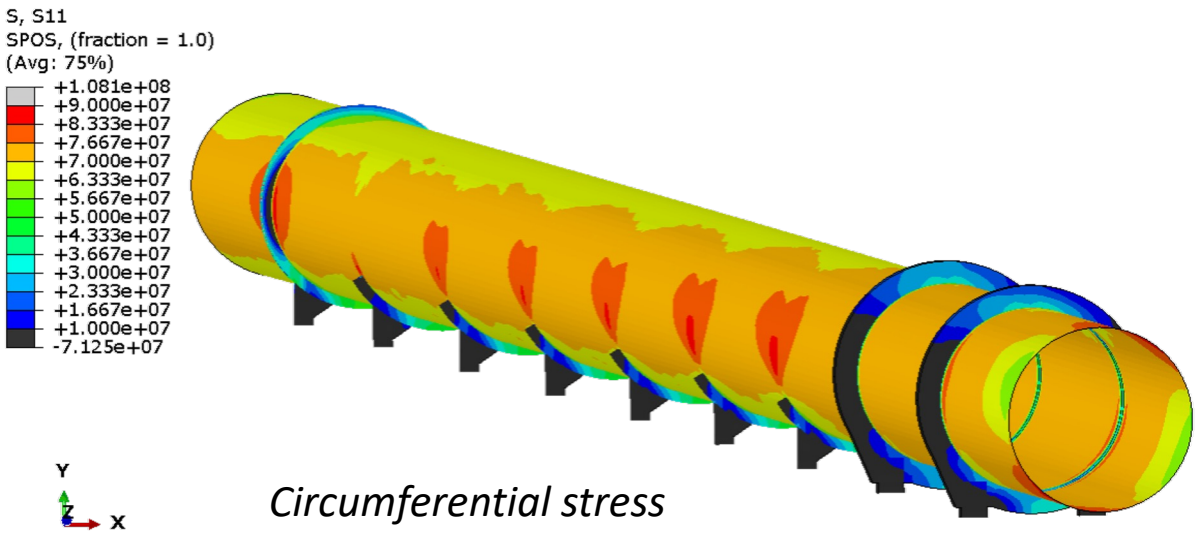

Circumferential stress (S11) distribution along the penstock

Buried penstocks: analytical formulation

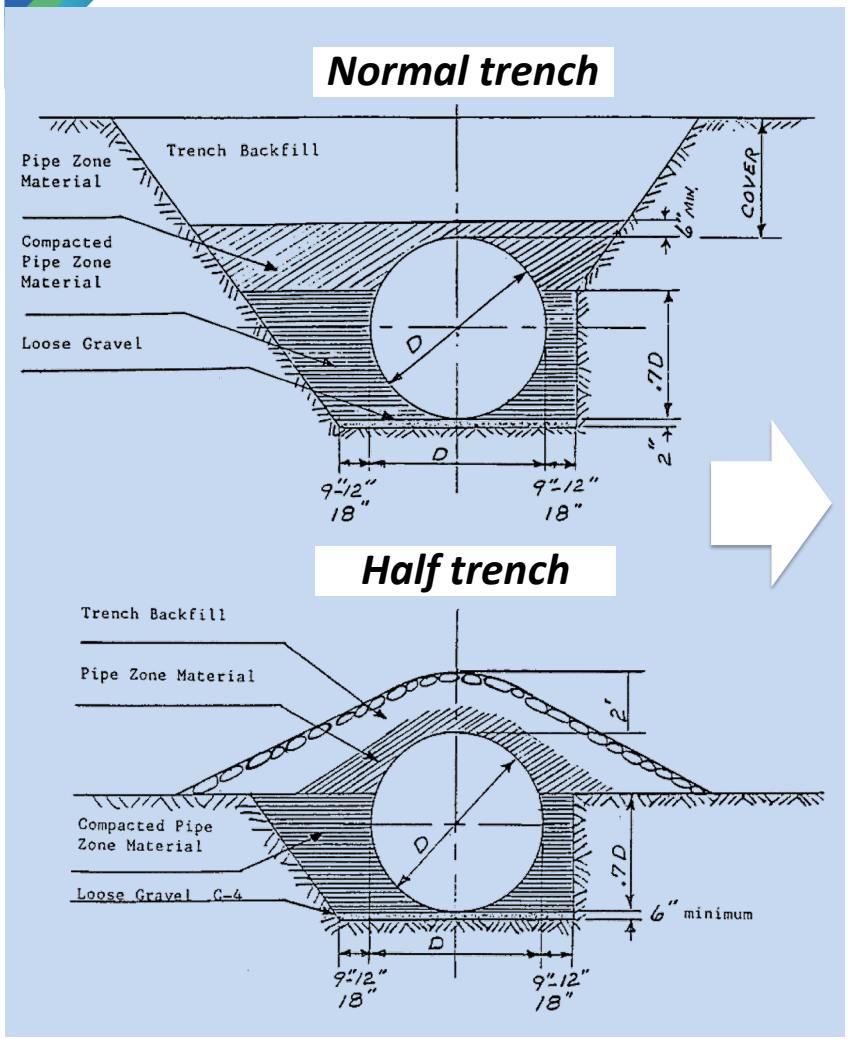

Hoop stress σ_ϕ

Marston & De Saedeleer theory

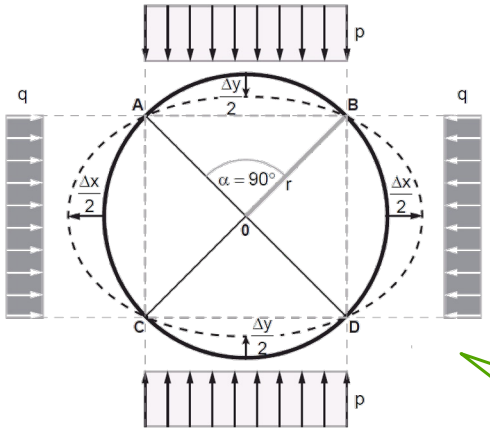

Longitudinal stress σ_x

Theory of beam on elastic foundation

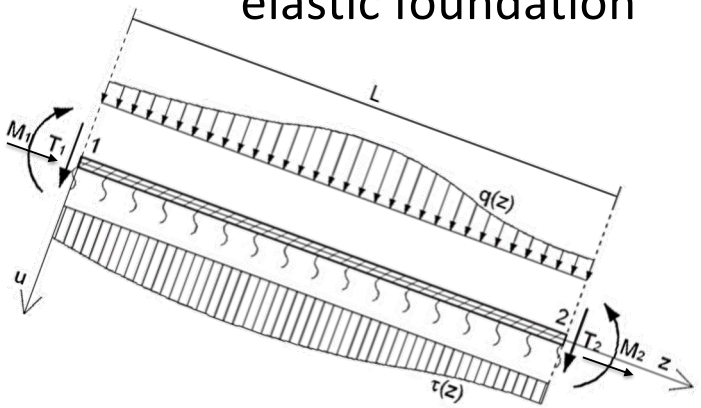

Simplified scheme to model the interaction between soil and penstock

Buried penstocks: 2D FE modelling

Simplified 2D numerical FE model

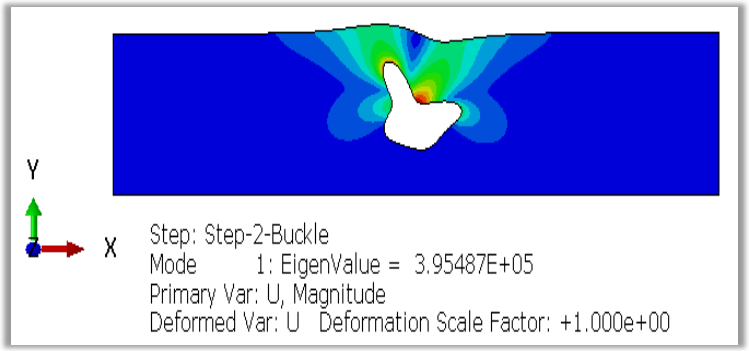

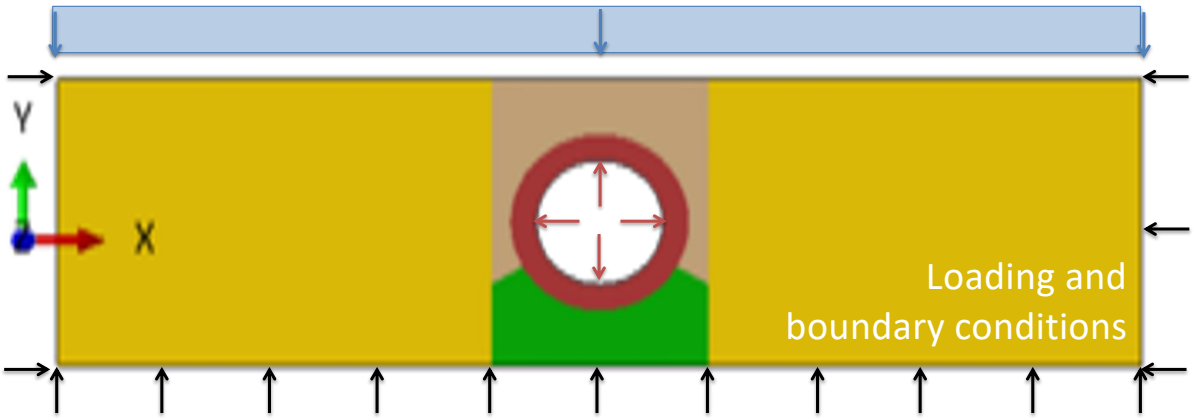

Snow load
Internal water pressure
Symmetric boundary conditions

Circumferential stresses are computed assuming a **plane strain condition**

Possibility to assign accurately:

- the appropriate material parameters to each foundation area (e.g., compacted zone and trench backfill)
- the loading and boundary conditions

Possibility to accurately compute the pressure distribution between the penstock and the foundation, taking into account the proper stiffness of each area

The concrete coating stiffness of steel penstock can be considered

The same 2D model can be used to carry out buckling analyses

Buckling - Analytical formulas are not always intuitive

Timoshenko e von Mises formula - ***local buckling*** *of the inner stiffener shell*

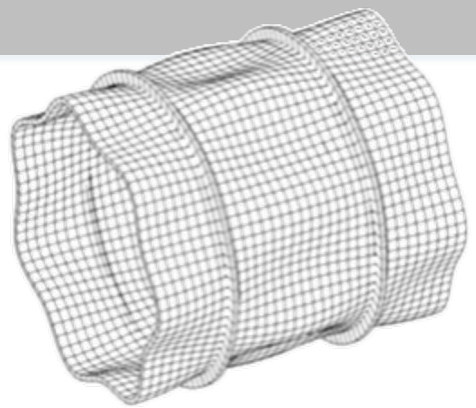

$$q_a = \frac{2Et}{D}\frac{1}{(n^2-1)\left(\frac{n^2}{\left(\frac{\pi D}{2s}\right)^2}+1\right)} + \frac{Et^3}{12(1-v^2)\left(\frac{D}{2}\right)^2}\left[(n^2-1)+\frac{2n^2-1-(n^2-1)v}{\frac{n^2}{\left(\frac{\pi D}{2s}\right)^2}+1}\right]$$





$$q_a = \frac{2Et}{D}\frac{\left(\frac{\pi D}{2s}\right)^4}{\left(n^2+\frac{\left(\frac{\pi D}{2s}\right)^2}{2}-1\right)\left(n^2+\left(\frac{\pi D}{2s}\right)^2\right)^2} + \frac{I(n^2-1)^2}{\left(\frac{D}{2}\right)^2 S}$$

Kendrick formula - ***general buckling***

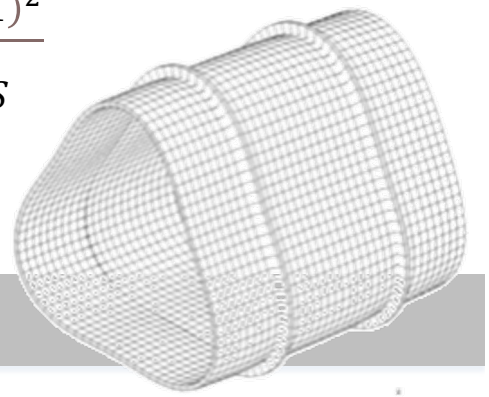

Dead weight of water inside the penstock

Simplified scheme

Dead water weight applied as a uniform distributed load with a uniform pressure distribution inside the penstock

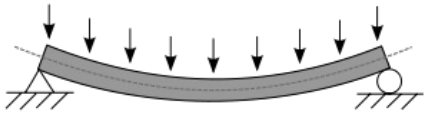

2D and 3D FE model

It's easy to apply an internal pressure varying with angle θ

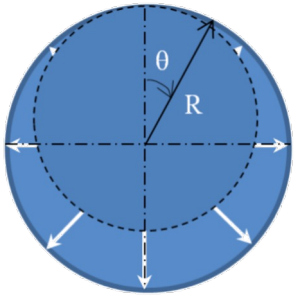

$$dp = \rho_{H2O}\, g\, (1 - cos\vartheta)\, dV$$
$$= \rho_{H2O}\, g\, (1 - cos\vartheta)\, R\, d\vartheta$$

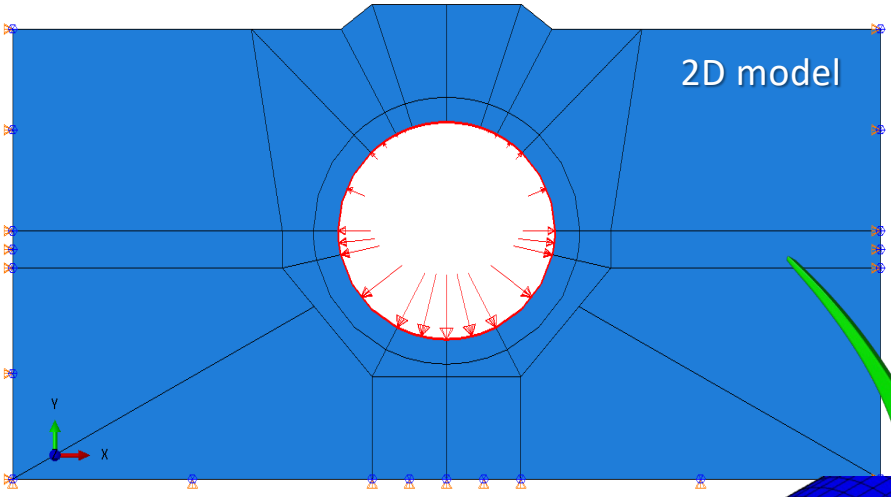

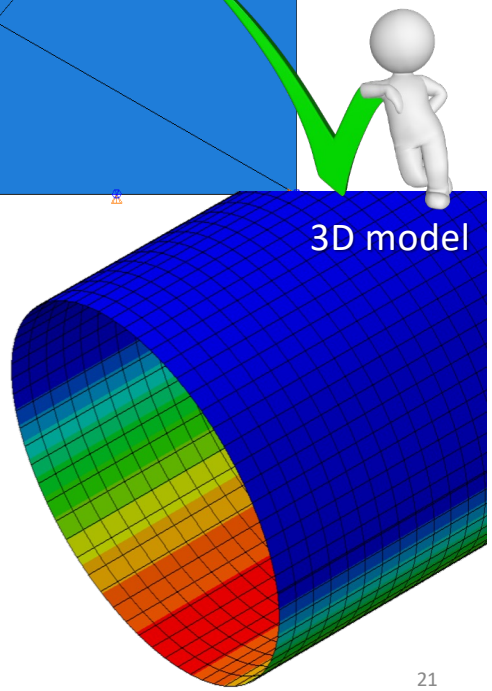

Realistic description of circumferential stresses

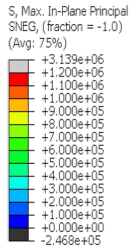



Old penstocks, designed according to the permissible stress approach, may not comply with the limit states verification





Safety assessment of a weakly reinforced concrete buried penstocks (1/4)

Buried concrete penstock, built in the last century according to the **permissible stress approach**

2D finite element model of the variable thick-walled transverse cross section

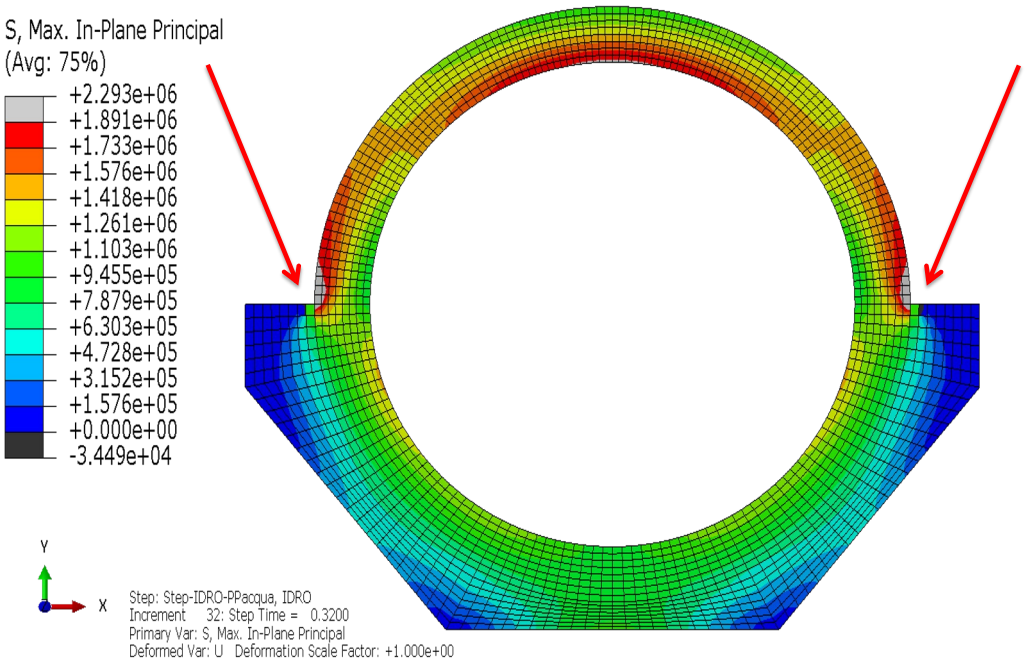

Permissible stress verification

The stresses do not exceed the elastic limit even if the steel reinforcements are not considered

Serviceability limit states verification

In the sections where thickness changes, the cracking limit state is not verified

- **The presence of the reinforcements was thus considered to assess the strength of the structure**

Safety assessment of a weakly reinforced concrete buried penstocks (2/4)

3D finite element model of a cross section 1 m thick

- **Concrete behavior** modelled with the **damage plasticity constitutive law** (parameters set up based on laboratory data)

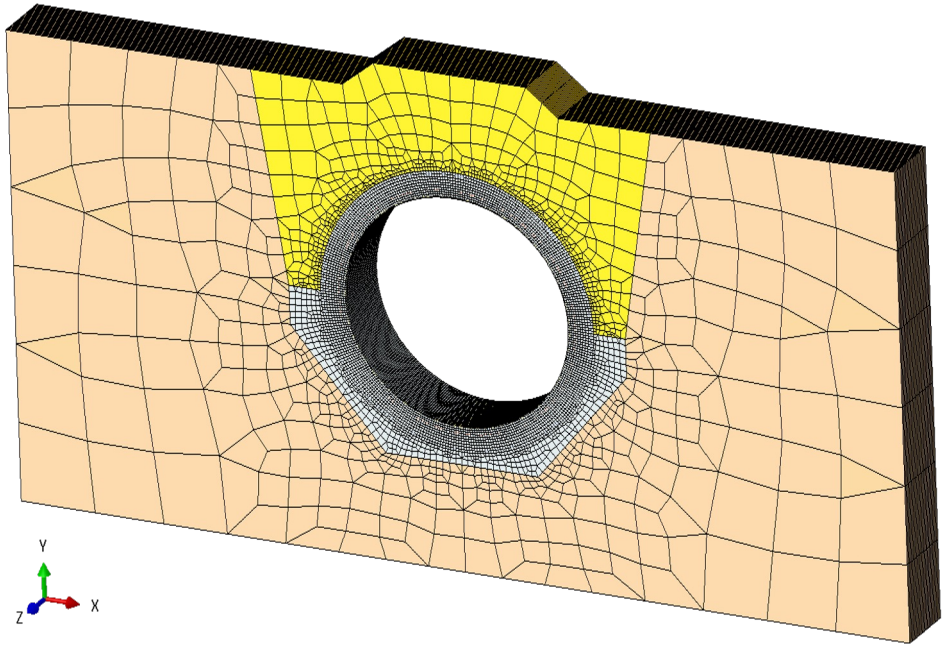

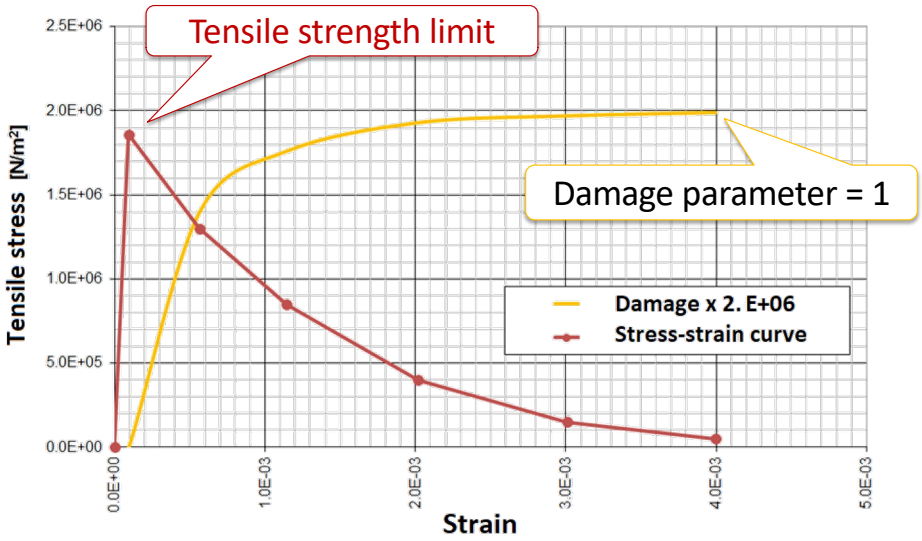

Safety assessment of a weakly reinforced concrete buried penstocks (3/4)

- **Reinforcements** modelled using **truss finite element** with the real cross-section area
- A linear elastic constitutive law was adopted

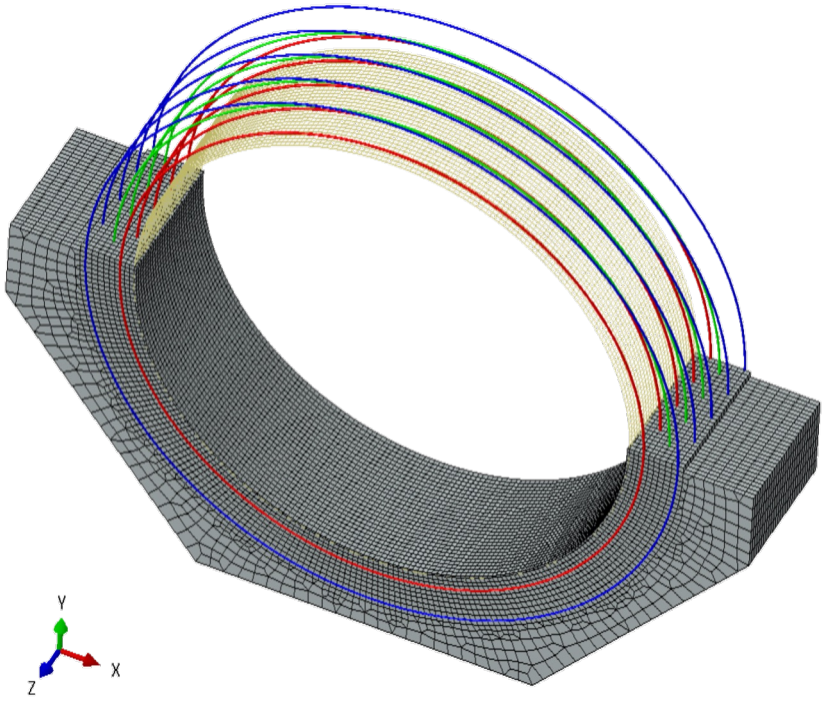

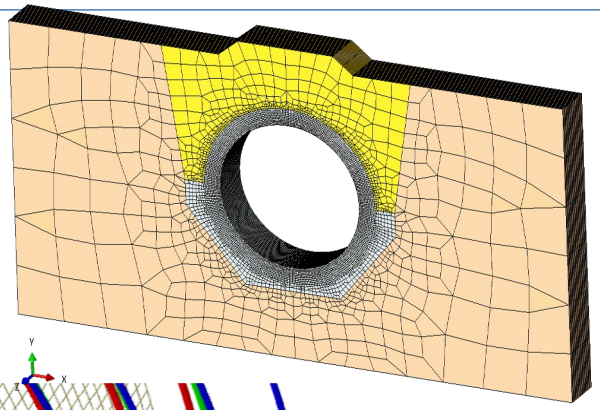

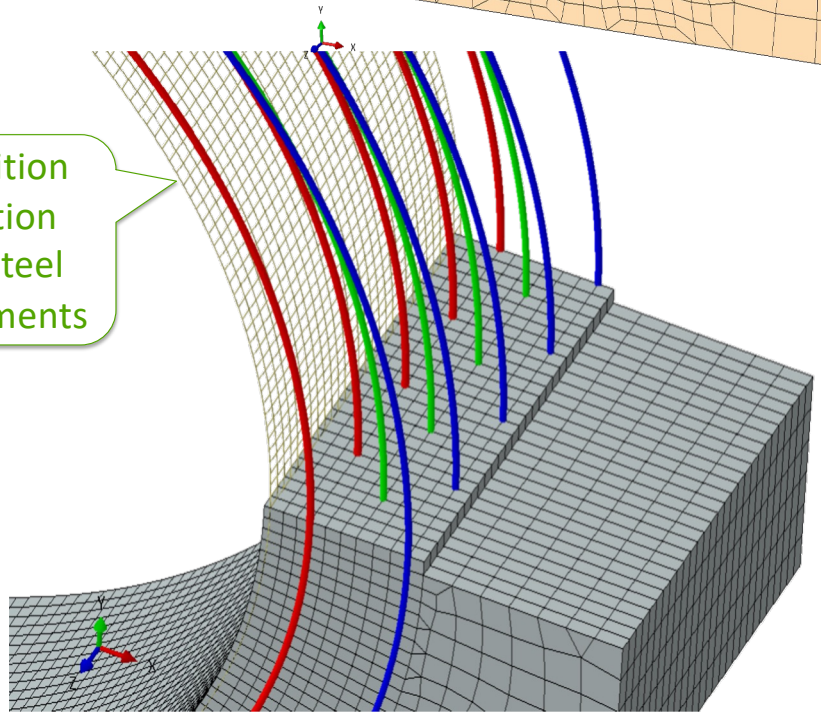

Real position and section area of steel reinforcements

Safety assessment of a weakly reinforced concrete buried penstocks (4/4)

Damage parameter

A unit value (in red) means cracks are formed

No cracks appears if reinforcements are modelled

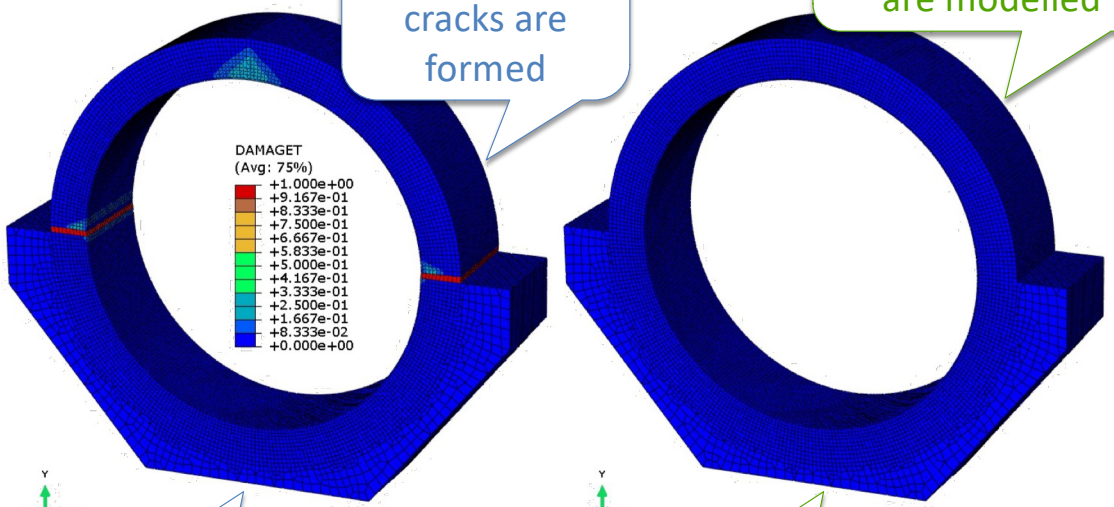

Without reinforcements

With reinforcements

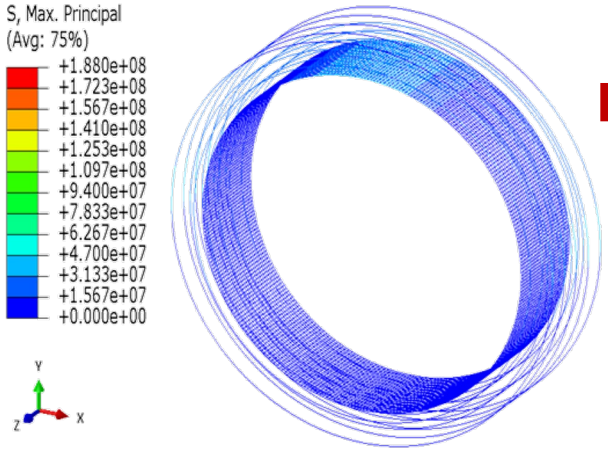

Maximum principal stresses in rebars

Serviceability limit states verification

- In concrete the cracking limit state is verified (no cracks are formed)
- In steel rebars the maximum principal stresses also comply with the ultimate limit states verification (working rate less than 60% for the worst loading condition)

RSE Ricerca Sistema Energetico | we move rsearch



antonella.frigerio@rse-web.it